REVISIONS		
REV.	DESCRIPTION	DATE
1	INITIAL RELEASE	7/18/2020

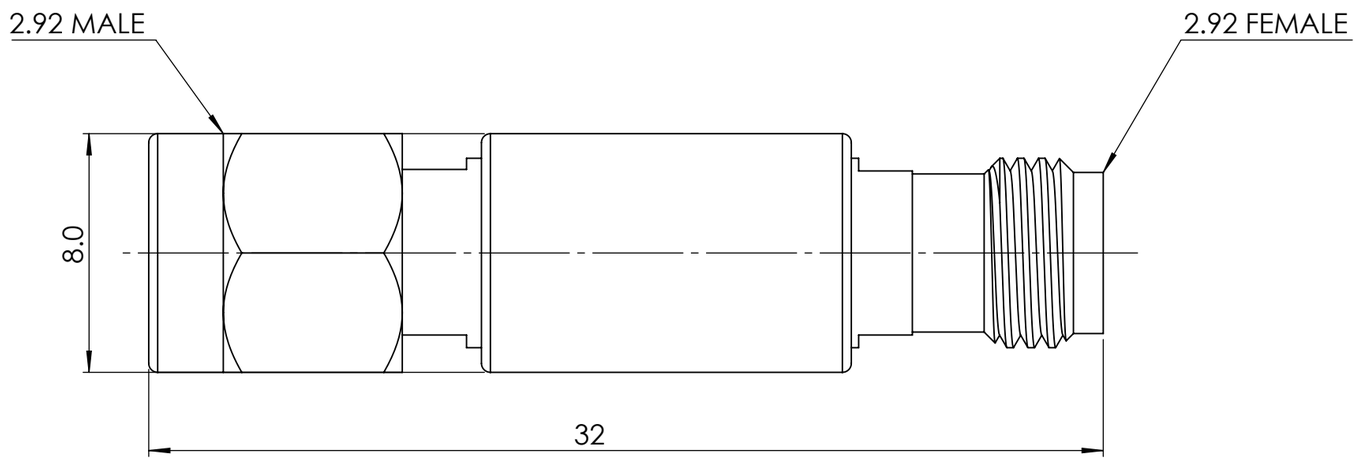

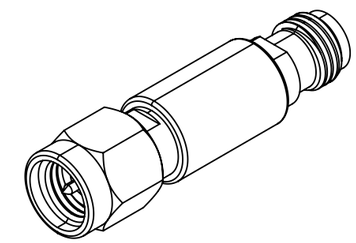

1. MATERIAL:
   - OUTERCONDUCTOR: STAINLESS TEEL, PASSIVATED;
   - CENTER CONDUCTOR: BERYLLIUM-COPPER, GOLD PLATED;
   - BODY: ALUMINUM;
2. TEMPERATURE RANGE: -55°C ~ +125°C;
3. DURABILITY: ≥500 MATING CYCLES.

ELECTRICAL						
P/N	FREQUENCY (GHz)	POWER	ATTENUATOR VALUE (dB)	VSWR MAX	IMPEDENCE	INSULATION RESISTANCE
ATT-2.92MF-2W-3D	DC-40 GHz	2W	3dB ±1.0	1.35	50Ω	≥5000MΩ
ATT-2.92MF-2W-6D			6dB ±1.0			
ATT-2.92MF-2W-10D			10dB ±1.0			
ATT-2.92MF-2W-20D			20dB ±1.0			
ATT-2.92MF-2W-30D			30dB ±1.0			

PROPRIETARY AND CONFIDENTIAL

THE INFORMATION CONTAINED IN THIS DRAWING IS THE SOLE PROPERTY OF Coax Wizard. ANY REPRODUCTION IN PART OR AS A WHOLE WITHOUT THE WRITTEN PERMISSION OF Coax Wizard IS PROHIBITED.

UNLESS OTHERWISE SPECIFIED:

DIMENSIONS ARE IN MM
TOLERANCES:
ANGULAR: MACH ± 1°
BEND ± 1°
INTEGER ± 3
ONE PLACE DECIMAL ± 1.0
TWO PLACE DECIMAL ± 0.10

INTERPRET GEOMETRIC TOLERANCING PER: ASME Y14.5

MATERIAL: NA

FINISH: NA

	NAME	DATE
DRAWN	JX	07/18/20
CHECKED	TC	07/18/20
ENG APPR.	QW	07/18/20
MFG APPR.		
Q.A.		

COMMENTS:

CUSTOMER OUTLINE DRAWING FOR REFERENCE ONLY

COAX WIZARD coaxwizard.com

TITLE:

ATTENUATOR, 2.92MM, M, 2.92MM, F, 2W

SIZE	PN. NO.	REV
B	ATT-2.92MF-2W-XX	1

SCALE: 1:2 | WEIGHT: | SHEET 1 OF 1